-Preliminary-

JRC New Japan Radio Co.,Ltd.
http://mc.njr.co.jp/
mcsales@njr.co.jp

■ C-band LNA

MODEL No. **NJS8451/52**

< Features >

*** Low Noise Temperature**
- Noise Temperature: 15 K

*** Low DC Current Drain**
- DC Current Drain: 125 mA

*** Small Size & Light Weight**
- Weight: 800 g

*** RoHS Compliance**

< Line-Up >

Model No.	RF Frequency	IF Connector	Power Supply
NJS8452	3.400 to 4.200 GHz (Palapa C-band)	N-type	+24 VDC (+12 to +28 VDC)
NJS8451	4.500 to 4.800 GHz (Insat C-band)		

< Specifications >

Item	Specifications
Input Interface	Waveguide, CPR229 (with Groove)
Output Interface	N-type, female (50 ohm)
Noise Temperature (Ta.: +25 C)	15 K typ., 30 K max.
Linear Gain (Ta.: +25 C)	55 dB min., 62 dB max.
Input V.S.W.R.	3.0 : 1 typ.
Output V.S.W.R.	2.0 : 1 max.
Power Requirement	+24 VDC (+12 to +28 VDC)
Current Drain	125mA typ., 160 mA max.
Temperature Range (ambient)	-40 to +60 C (operating), -40 to +80 C (storage)
Dimension & Housing	80.8 mm (L) x 99.6 mm (W) x 76 mm (H)
(without Interface Connectors)	[3.18" (L) x 3.92" (W) x 2.99" (H)]
Weight	800 g [1.76 lbs]

Note: The contents of this sheet are subject to change without notice.

Copyright © 2009 New Japan Radio Co., Ltd.

New Japan Radio Co.,Ltd.
http://mc.njr.co.jp/
mcsales@njr.co.jp

■ C-band LNA

MODEL No. **NJS8451/52** series

< Outline Drawing >

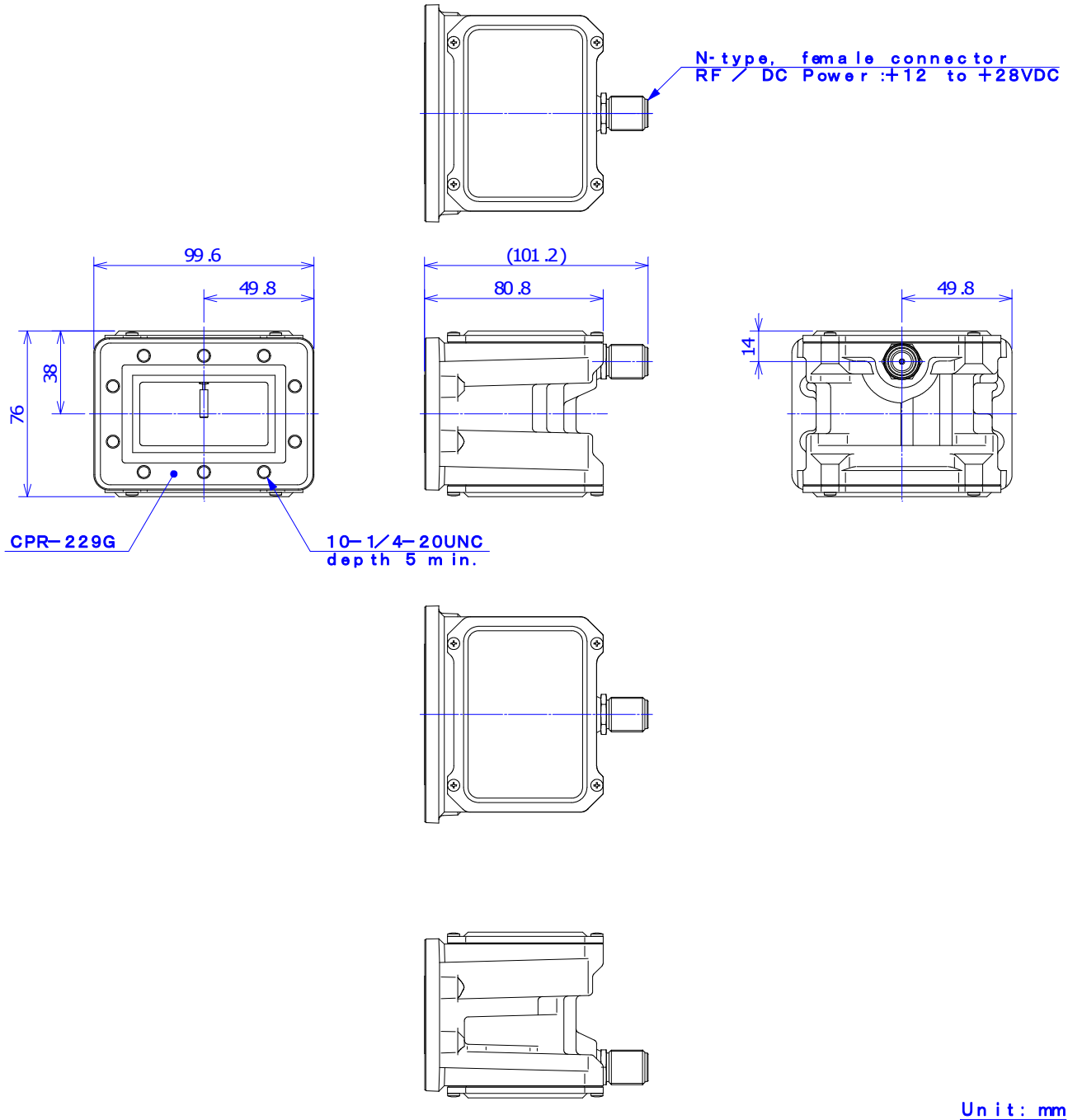

Unit: mm

Copyright © 2009 New Japan Radio Co., Ltd.